EUROPEAN STANDARD

NORME EUROPÉENNE

EUROPÄISCHE NORM

EN 10223-3

December 2013

ICS 77.140.65

Supersedes EN 10223-3:1997

English Version

Steel wire and wire products for fencing and netting - Part 3: Hexagonal steel wire mesh products for civil engineering purposes

Fils et produits tréfilés en acier pour clôtures et grillages - Partie 3: Produits en grillage à mailles hexagonales en acier pour applications en génie civil

Stahldraht und Drahterzeugnisse für Zäune und Drahtgeflechte - Teil 3: Stahldrahtgeflecht mit sechseckigen Maschen für bauwirtschaftliche Zwecke

This European Standard was approved by CEN on 29 June 2013.

CEN members are bound to comply with the CEN/CENELEC Internal Regulations which stipulate the conditions for giving this European Standard the status of a national standard without any alteration. Up-to-date lists and bibliographical references concerning such national standards may be obtained on application to the CEN-CENELEC Management Centre or to any CEN member.

This European Standard exists in three official versions (English, French, German). A version in any other language made by translation under the responsibility of a CEN member into its own language and notified to the CEN-CENELEC Management Centre has the same status as the official versions.

CEN members are the national standards bodies of Austria, Belgium, Bulgaria, Croatia, Cyprus, Czech Republic, Denmark, Estonia, Finland, Former Yugoslav Republic of Macedonia, France, Germany, Greece, Hungary, Iceland, Ireland, Italy, Latvia, Lithuania, Luxembourg, Malta, Netherlands, Norway, Poland, Portugal, Romania, Slovakia, Slovenia, Spain, Sweden, Switzerland, Turkey and United Kingdom.



EUROPEAN COMMITTEE FOR STANDARDIZATION
COMITÉ EUROPÉEN DE NORMALISATION
EUROPÄISCHES KOMITEE FÜR NORMUNG

CEN-CENELEC Management Centre: Avenue Marnix 17, B-1000 Brussels

© 2013 CEN All rights of exploitation in any form and by any means reserved worldwide for CEN national Members.

Contents

Page

Foreword 3
1 Scope 4
2 Normative references 4
3 Terms and definitions 5
4 Information to be supplied by the purchaser 10
5 Manufacture 11
6 Requirements 13
7 Sampling and testing 17
8 Inspection and documentation 17
9 Method of test 17
10 Packaging 20
Annex A (informative) **Description of environment of installation site, coating wire requirements** 21
Bibliography 24

Foreword

This document (EN 10223-3:2013) has been prepared by Technical Committee ECISS/TC 106 “Wire rod and wires”, the secretariat of which is held by AFNOR.

This European Standard shall be given the status of a national standard, either by publication of an identical text or by endorsement, at the latest by June 2014, and conflicting national standards shall be withdrawn at the latest by June 2014.

Attention is drawn to the possibility that some of the elements of this document may be the subject of patent rights. CEN [and/or CENELEC] shall not be held responsible for identifying any or all such patent rights.

This document supersedes EN 10223-3:1997.

In comparison with the previous edition, the entire document has been revised.

EN 10223, *Steel wire and wire products for fencing and netting* consists of the following parts:

— *Part 1: Zinc and zinc alloy coated steel barbed wire*

— *Part 2: Hexagonal steel wire netting for agricultural, insulation and fencing purposes*

— *Part 3: Hexagonal steel wire mesh products for engineering purposes* (the present document)

— *Part 4: Steel wire welded mesh fencing*

— *Part 5: Steel wire woven hinged joint and knotted mesh fencing*

— *Part 6: Steel wire chain link fencing*

— *Part 7: Steel wire welded panels for fencing*

— *Part 8: Welded mesh gabion products*

According to the CEN-CENELEC Internal Regulations, the national standards organizations of the following countries are bound to implement this European Standard: Austria, Belgium, Bulgaria, Croatia, Cyprus, Czech Republic, Denmark, Estonia, Finland, Former Yugoslav Republic of Macedonia, France, Germany, Greece, Hungary, Iceland, Ireland, Italy, Latvia, Lithuania, Luxembourg, Malta, Netherlands, Norway, Poland, Portugal, Romania, Slovakia, Slovenia, Spain, Sweden, Switzerland, Turkey and the United Kingdom.

1 Scope

This European Standard specifies requirements for the dimensions, coatings, test methodology and delivery conditions of steel wire mesh products having meshes of hexagonal shape specified for engineering purposes.

2 Normative references

The following documents, in whole or in part, are normatively referenced in this document and are indispensable for its application. For dated references, only the edition cited applies. For undated references, the latest edition of the referenced document (including any amendments) applies.

EN 10088-1, *Stainless steels — Part 1: List of stainless steels*

EN 10218-1, *Steel wire and wire products — General — Part 1: Test methods*

EN 10218-2:2012, *Steel wire and wire products — General — Part 2: Wire dimensions and tolerances*

EN 10244-1, *Steel wire and wire products — Non-ferrous metallic coatings on steel wire — Part 1: General principles*

EN 10244-2, *Steel wire and wire products — Non-ferrous metallic coatings on steel wire — Part 2: Zinc or zinc alloy coatings*

EN 10245-1, *Steel wire and wire products — Organic coatings on steel wire — Part 1: General rules*

EN 10245-2, *Steel wire and wire products — Organic coatings on steel wire — Part 2: PVC finished wire*

EN 10245-3, *Steel wire and wire products — Organic coatings on steel wire — Part 3: PE coated wire*

EN 10245-5, *Steel wire and wire products — Organic coatings on steel wire — Part 5: Polyamide coated wire*

EN ISO 4892-2, *Plastics — Methods of exposure to laboratory light sources — Part 2: Xenon-arc lamps (ISO 4892-2)*

EN ISO 4892-3, *Plastics — Methods of exposure to laboratory light sources — Part 3: Fluorescent UV lamps (ISO 4892-3)*

EN ISO 6988, *Metallic and other non-organic coatings — Sulfur dioxide test with general condensation of moisture (ISO 6988)*

EN ISO 9223:2012, *Corrosion of metals and alloys — Corrosivity of atmospheres — Classification, determination and estimation (ISO 9223:2012)*

EN ISO 9227, *Corrosion tests in artificial atmospheres — Salt spray tests (ISO 9227)*

EN ISO 16120-1, *Non-alloy steel wire rod for conversion to wire — Part 1: General requirements (ISO 16120-1)*

EN ISO 16120-2, *Non-alloy steel wire rod for conversion to wire — Part 2: Specific requirements for general-purpose wire rod (ISO 16120-2)*

3 Terms and definitions

For the purposes of this document, the following terms and definitions apply.

3.1
mesh size of hexagonal mesh
distance measured at right angles between two twisted sides *M* (see Figure 1)

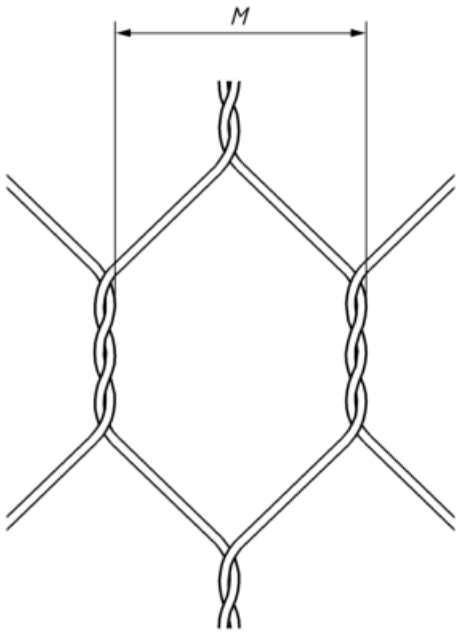

Key

M calculated average value after measuring the distance between two twisted sides over ten meshes

Figure 1 – Mesh size

3.2
double twisted hexagonal mesh
hexagonal-netting consisting of hexagonal shaped meshes, formed by twisting adjacent wires two by two, alternatively forming a twist to the right and to the left

3.3
mesh designations
definition of the hexagonal mesh type related to typical dimension of mesh

Note 1 to entry: Example of mesh designation: 8 x 10.

3.4
twist
tight winding of two wires around each other measured as each revolution of the two wires over 180°

Note 1 to entry: The wires rotate only in one direction.

3.5
hexagonal steel wire mesh in rolls
mesh to be used for rockfall and slope protections

Note 1 to entry: The netting is a longitudinal border composed of a single selvedge wire: this wire has a greater diameter than that used for the net (see Figure 2).

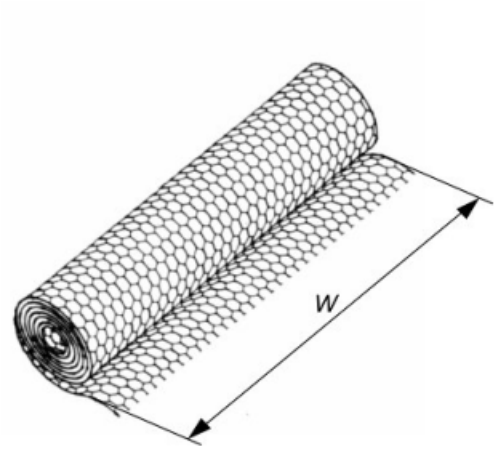

Key
W width

Figure 2 – Mesh in rolls

3.6
gabion
double twisted steel wire mesh box made with a base panel and lateral side, see Figure 3a) (and eventually internal diaphragms, see Figure 3b)), connected together according to manufacturer's recommendations

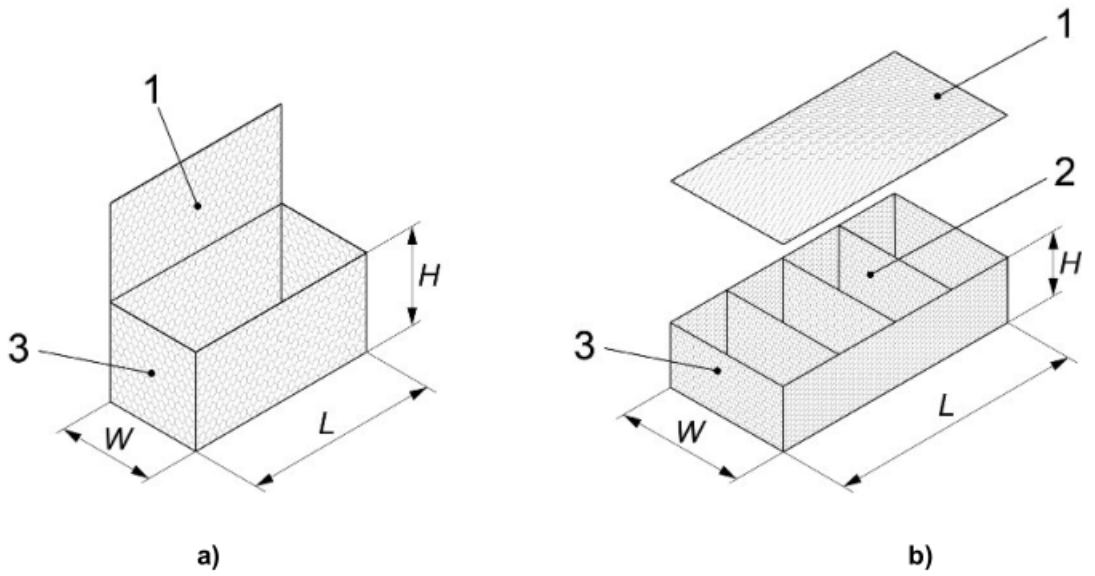

Key

1 lid
2 diaphragms
3 end panels
H height
L length
W width

The end external borders of base panel shall have a selvedge wire with a diameter greater than the one used for the longitudinal reinforcement. The lid of the structure can be made with a detached double twisted steel wire mesh panel.

Figure 3 — Example of gabion without diaphragm a) and example of gabion with diaphragm b)

3.7
mattress
double twisted steel wire mesh unit with large dimensions (*L* and *W*) and small thickness (*H*), provided with internal diaphragms with a nominal spacing of 1,00 m and a separated lid (also with mesh in rolls)

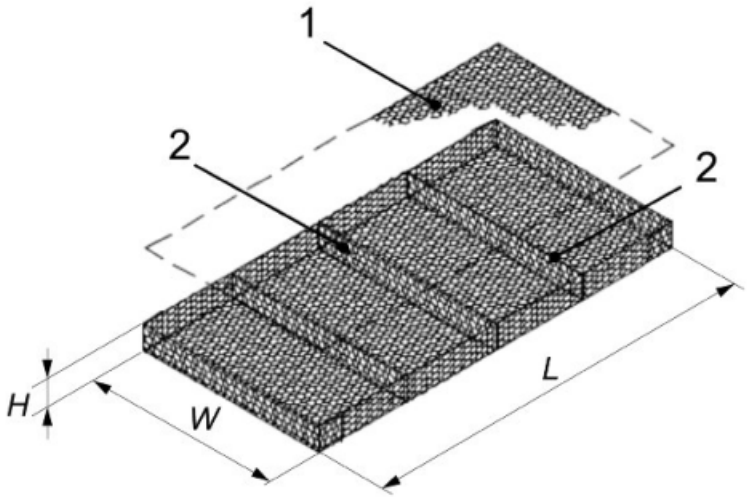

Key

1 lid
2 diaphragms
H height
L length
W width

Figure 4 – Mattress

3.8
sack gabions
cylindrical double twisted steel wire mesh unit with a lateral opening to allow the stone filling on job site

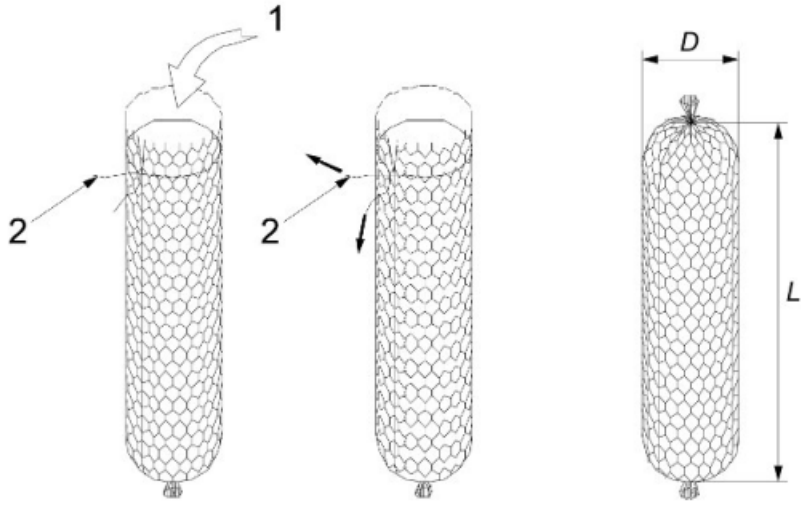

Key

1 filling
2 lacing wire
D diameter of the sack gabions
L length of the sack gabions

Figure 5 – Example of sack gabions

3.9
bracing tie
length of zinc or zinc-aluminium coated steel wire for use with the equivalent corrosion protection of the gabions or organic coated or stainless steel for organic coated mesh wire used for support by forming a diagonal brace across the corners, inside of the gabion container

3.10
lacing wire
for gabions and gabion mattresses; steel wire coated with zinc, zinc-aluminium alloy or organic over-coating, stainless steel wire used to assemble and interconnect empty gabions and to close and secure units filled with stone, as a replacement for spiral binders or rings and also used as bracing tie to prevent face deformation

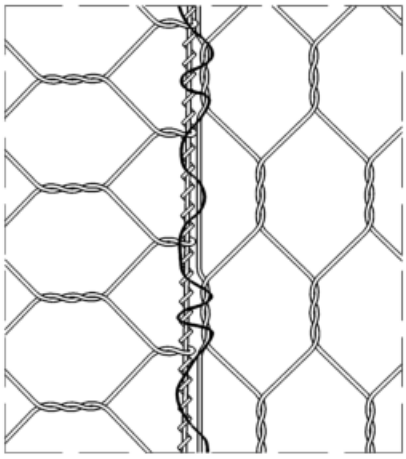

Figure 6 — Lacing wire

3.11
gabion ring
C-shaped ring, made from very high resistance zinc or zinc-aluminium alloy coated steel wire or stainless steel wire, used to assemble and interconnect the empty gabions and to close and secure the units filled with stone

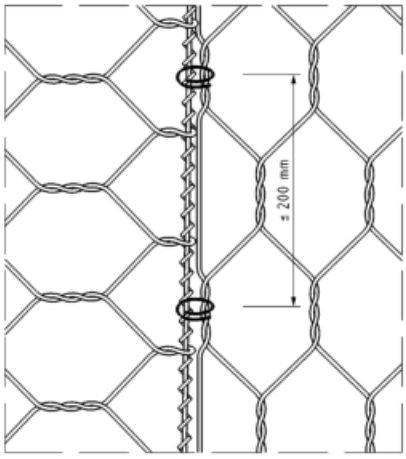

Figure 7 — Rings

3.12
soil reinforcement units for retaining structure
double twisted steel wire mesh units used for soil reinforced structures and slope consolidation

Note 1 to entry: For structures with vertical facing (see Figure 8), units are made with a hexagonal wire mesh continuous base panel for the reinforcement and the facing portion of the structure.

Note 2 to entry: For structures with a inclined vegetative facing (see Figure 9), units are made with a hexagonal wire mesh base reinforcement, provided (or made) with a welded mesh panel for facing, a geotextile for soil retention and metallic ties for installation procedures.

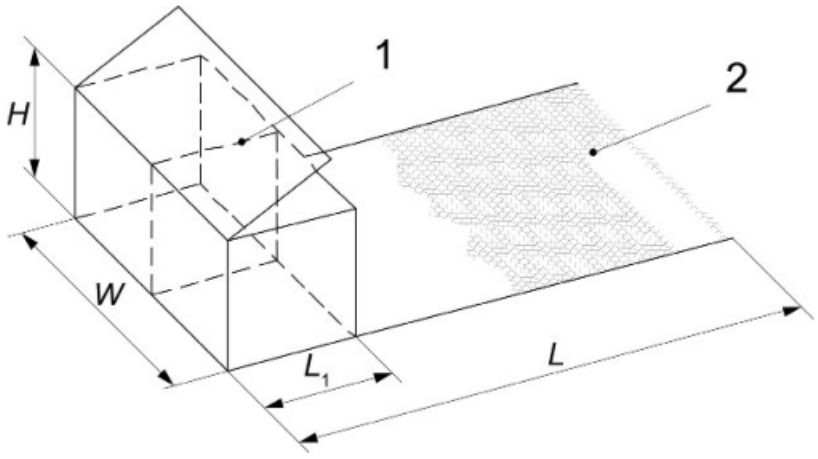

Key

1 diaphragm
2 base panel
H height
L length
L_1 thickness of the facing
W width

Figure 8 – Example of units for vertical facing structures

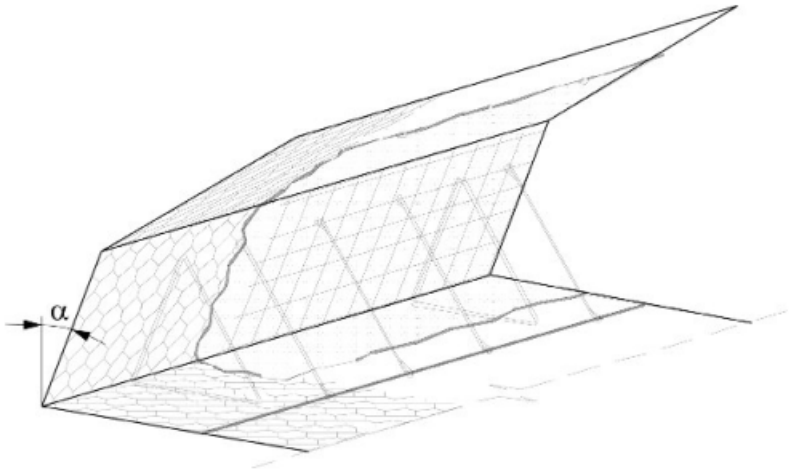

Key

α variable between 20° and 45°

Figure 9 — Example of a soil reinforcement unit with an inclined vegetative facing

4 Information to be supplied by the purchaser

The following information shall be supplied by the purchaser at the time of enquiry and order:

a) number of this European Standard;

b) quantity and type of designation (for box gabions with or without diaphragms);

c) size of the rolls or units;

d) mesh designations;

e) wire diameter (mesh wire and lacing wire);

f) coating type and class of coating, if applicable (see 6.4, 6.7.1, 6.7.2 and 9.1);

g) characteristics of the eventual organic coating, if applicable (see 6.5, 6.7.3 and 9.2);

h) inspection documentation requirements.

Example of designation to be used on ordering:

EXAMPLE According to EN 10223-3: No. 100 Mattresses 4 m x 2 m x 0,23 m - Mesh type 6 x 8, wire 2,2 mm – Zn95%-Al5% + PVC coated.

5 Manufacture

5.1 General

The Quality Management System, supervising the internal manufacturer's procedures, should be certified according to EN ISO 9001 by an independent body.

5.2 Base metal

The base metal of the hexagonal netting shall be a steel wire in compliance with EN 10218-1 and EN 10218-2 with a minimum tensile strength in the range of 350 N/mm^2 to 550 N/mm^2, with a minimum elongation at fracture of 8 % on a gauge length of 250 mm and shall be drawn from rods complying with EN ISO 16120-1 and EN ISO 16120-2.

If stainless steel wires are used, the chemical composition shall be in accordance with EN 10088-1 or in agreement between the supplier and purchaser at the time of enquiry and order.

5.3 Fabrication

The double twisted steel wire mesh product shall be fabricated in order to achieve the assumed working life in relation to the environment conditions of the site of installation as reported in Table 1.

Double twist wire mesh products immersed in water in contact with alkaline solutions, or products which are subject to erosion (sand storms, …) shall be galvanized with zinc alloy and plastic coated. In these cases, assumed working life shall be agreed between purchaser and supplier at the time of enquiry and order.

Table 1 – Description of environment of installation site, coating wire requirements *(1 of 2)*

Site Environment level [a] (in accordance with EN ISO 9223:2012, Table 1)	Plastic coating material [c]	Coating	Class [b] (EN 10244-2)
Low Aggressive: (C2) Dry conditions Temperate zone, atmospheric environment with low pollution, e.g. rural areas, small towns (over 100 m above see level). Dry or cold zone, atmospheric environment with short time of wetness, e.g. deserts, sub-arctic areas	-	Zinc	A
	-	Zn95%/Al5% alloy	A
	-	Zn90%/Al10% alloy	A
Medium aggressive: (C3) Dry conditions Temperate zone, atmospheric environment with medium pollution or some effect of chlorides, e.g. urban areas, coastal areas with low deposition of chlorides, e.g. subtropical and tropical zone, atmosphere with low pollution		Zinc	A
		Zn95%/Al5% alloy	A
		Zn90%/Al10% alloy	A
	Polyvinyl chloride (PVC)	Zn95%/Al5% alloy	*A*
	Polyamide (PA6)		E
	Polyvinyl chloride (PVC)	Zn90%/Al10% alloy	A
	Polyamide (PA6)		E
High aggressive: (C4) Wet conditions Temperate zone, atmospheric environment with high pollution or substantial effect of chlorides, e.g. polluted urban areas, industrial areas, coastal areas, without spray of salt water, exposure to strong effect of de-icing salts, e.g. subtropical and tropical zone, atmosphere with medium pollution industrial areas, coastal areas, shelter positions at coastline	-	Zn95%/Al5% alloy	A
	-	Zn90%/Al10% alloy	A
	Polyvinyl chloride (PVC)	Zn95%/Al5% alloy	A
	Polyamide (PA6)		E
	Polyvinyl chloride (PVC)	Zn90%/Al10% alloy	A
	Polyamide (PA6)		E

Table 1 *(2 of 2)*

Site Environment level [a] **(in accordance with EN ISO 9223:2012, Table 1)**	**Plastic coating material** [c]	**Coating**	**Class** [b] **(EN 10244-2)**
Very High aggressive: (C5) Wet conditions Temperate and subtropical zone, atmospheric environment with very high pollution and/or important effect of chlorides, e.g. industrial areas, coastal areas, shelter positions at coastline	Polyvinyl chloride (PVC)	Zn95%/Al5% alloy	A
	Polyamide (PA6)		E
	Polyvinyl chloride (PVC)	Zn90%/Al10% alloy	A
	Polyamide (PA6)		E
Extreme aggressive: (CX) Subtropical and tropical zone (very high time of wetness), atmospheric environment with very high pollution SO_2 (higher than 250 µg/m^3) including accompanying and production ones and/or strong effect of chlorides, e.g. extreme industrial areas, coastal and off shore areas, occasionally contact with salt spray	Polyvinyl chloride (PVC)	Zn90%/Al10% alloy	A
	Polyester (P)Polyamide (PA6)		E

[a] Gabion products immersed in water (saline and/or polluted water) and/or in contact with alkaline solutions, or gabions which are subject to abrasive conditions (sand storms, …) shall be metallic coated with plastic coating or shall be made from stainless steel wire.

[b] There exist more advanced metallic coatings with a superior corrosion resistance. In terms of salt spray performance (EN ISO 9227), it means that the mesh samples shall not show more than 5 % of DBR (Dark Brown Rust) after 2 000 h exposure on the surface. When subjected to test in sulphur dioxide environment (ISO 6988), mesh samples shall not show more than 5 % of DBR after 56 cycles of discontinuous test on the surface. Assumed working life values will, therefore, be improved depending upon the prevailing conditions.

[c] More advanced organic coatings with an equivalent or superior corrosion protection may be considered in order to improve the assumed working life.

6 Requirements

6.1 General

The products shall be manufactured in the different sizes in relation to customer requests and producer capability.

The mesh opening sizes and their tolerances shall be as in Table 2.

The manufacture of double twist mesh for soil reinforcement products shall be made with plastic coated wire.

The steel wire diameter tolerances shall be in accordance with class T1 of EN 10218-2:2012.

The relationship between the core diameter and the diameter of the organic-coated wire shall be in accordance with Table 4.

Table 2 —Mesh sizes, wire sizes, tolerances and applications

Mesh designation	Mesh size *M*	Mesh size tolerances	Wire diameter *d*	Type of product
	(mm)	(mm)	(mm)	
5x7	50	- 0/+6	2,0	Mesh in roll
6x8	60	- 0/+8	2,0 [a]	Mesh in roll; Mattresses
			2,2 [a]	
			2,4	Mesh in roll
			2,7	Mesh in roll; Gabions
8x10	80	- 0/+10	2,2	Soil reinforcement units for retaining structures [b]
			2,4	-
			2,7 [a]	Soil reinforcement units for retaining structures [b] Gabions; Mesh in roll
			3,0 3,4 3,9	Mesh in roll; Gabions
10x12	100	- 4/+12	2,7	Mesh in roll
			3,0	

[a] With or without plastic coating.

[b] With plastic coating for soil reinforcement products.

6.2 Selvedge (edge longitudinal and selvedge transversal wires)

The meshes specified in this European Standard shall have a selvedge wire along the longitudinal edges having a diameter greater than the one used for the net (see Figure 10), as indicated in Table 3.

All the external borders of the finished products (except the transversal borders crosswise to the weave length of the soil reinforcement units for retaining structures) will be provided of the same wire quality but with a greater diameter, mechanically connected to the mesh during the production process.

The strength of the joint between the mesh fabric and the selvedge wire shall not be less than the pull apart strength of the mesh joint.

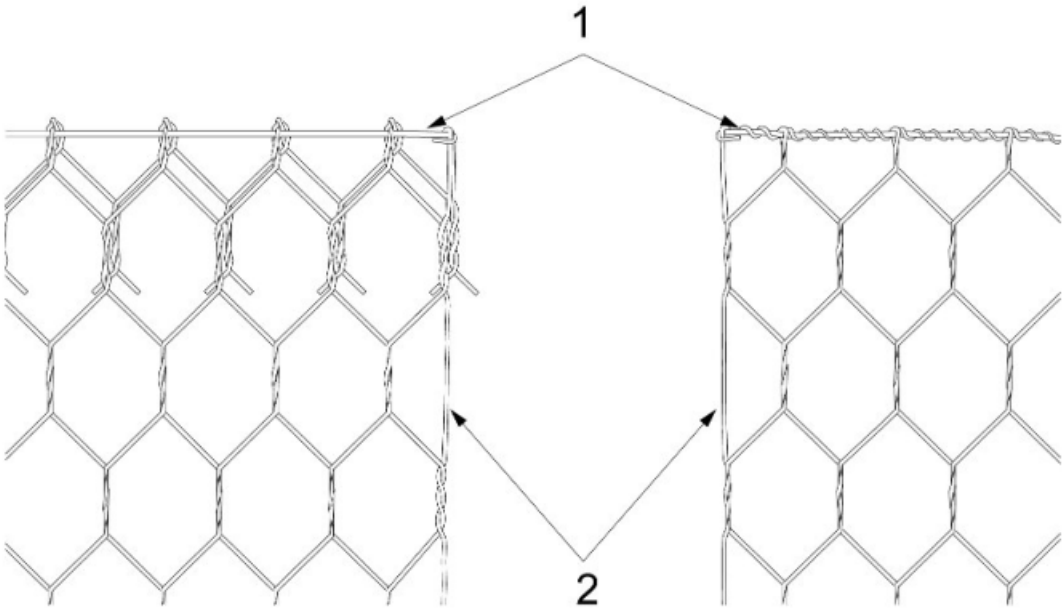

Key

1 selvedge wire

2 edge wire

Figure 10 —Examples of selvedging and edging

Table 3 — Mesh, selvedge and edging wire diameters

Diameter of mesh wire mm	Diameter of selvedge and edging wire mm
2,0	2,4
2,2	2,7
2,4	3,0
2,7	3,4
3,0	3,9
3,4	4,4
3,9	4,9

6.3 Tolerances on dimensions

The product tolerances shall be:

— for gabions and units for soil reinforcement, the length, width and height (diameter for sack gabions) ± 5 %;

— for mattresses, the length and width ± 5 %, the thickness ± 2,5 cm;

— for mesh in rolls, the width ± *M,* the length 0/+1 m.

6.4 Mesh made from metallic coated wire

Before fabricating into netting, the metallic coated wire shall meet the minimum requirements as specified in 5.3 for coating mass, adherence and where specified, the uniformity of the coating.

When samples are taken from the fabricated netting: the minimum coating mass requirement is reduced by 5 % from what is reported in EN 10244-2, and the specified number of dips is reduced by one half minute.

6.5 Mesh made from metallic extruded organic coated wire

Tests on the organic coating shall be stated by the purchaser on the order and shall conform to EN 10245-1, EN 10245-2, EN 10245-3 and EN 10245-5.

Table 4 – Relationship between the core diameter and the diameter of the organic coated wire

Core diameter metallic coatings [a] *d* mm	Organic coated wire diameter [b] *D* mm
2,0	2,50
2,2	2,90
2,4	3,10
2,7	3,40
3,0	3,70
3,4	4,20

[a] In accordance with T1 of EN 10218-2:2012.

[b] Tolerance on diameter, minimum coating thickness and minimum concentricity shall be in accordance with EN 10218-2 for extruded coatings. Thicker coatings are possible in accordance with the requirements for the project.

6.6 Mesh tensile strength

The nominal hexagonal double twisted steel wire mesh tensile strength, when tested according to the procedures of 9.3, shall be specified by the manufacturer.

When the mesh is provided with organic coating, a sample shall be tested (according to 9.3) at 50 % of the nominal tensile strength without showing cracks in the organic coating within the double twists region.

6.7 Ageing and Corrosion Resistance

6.7.1 Zn95Al5 class A

When subjected to test in a sulphur dioxide environment according to the procedures in EN ISO 6988 (0,2 dm^3 SO_2 per 2 dm^3 water) after 28 cycles of discontinuous test, the mesh samples shall not show more than 5 % of DBR (Dark Brown Rust).

When subjected to the neutral salt spray test according to the procedures in EN ISO 9227 after a period of 1 000 h of exposure, the mesh samples shall not show more than 5 % of DBR.

6.7.2 Zn90Al10 class A or equivalent advanced metallic coatings

When subjected to test in a sulphur dioxide environment according to the procedures in EN ISO 6988 (0,2 dm^3 SO_2 per 2 dm^3 water) after 56 cycles of discontinuous test, the mesh samples shall not show more than 5 % of DBR (Dark Brown Rust).

When subjected to the neutral salt spray test according to the procedures in EN ISO 9227 after a period of 2 000 h of exposure, the mesh samples shall not show more than 5 % of DBR.

6.7.3 Organic coated

The polymer mechanical characteristics (elongation and tensile strength) of the base compound after a UV-rays exposition of 4 000 h to Xenon Arc (EN ISO 4892-2) or 2 500 hours QUV-A (ISO 4892-3 exposure mode 1) cannot change more than 25 % from the initial test results.

6.7.4 Stainless steel

The corrosion resistance of stainless steels is very dependant on the type of environment and, therefore, cannot always be clearly ascertained through laboratory tests. It is therefore advisable to draw on the available experience of the use of the steels.

6.8 Lacing wire

Lacing wire shall be made with the same requirements (tensile strength and coating) of the wire used for the double twist wire mesh products it is used for and have minimum 2,2 mm diameter.

6.9 Lacing ring

Lacing rings shall be produced from zinc or zinc-aluminium alloy coated wire with a diameter of 3,00 mm and a minimum coated mass of 255 g/m^2.The minimum tensile strength of the wire of the lacing ring shall be 1 720 MPa for zinc and zinc-aluminium alloy coated wire and 1 550 MPa for stainless steel wire. The pull-apart strength of the lacing ring shall be minimum 2,0 kN.

7 Sampling and testing

The manufacturer is responsible for the control of product quality by the application of statistical methods of sampling and analysis of results.

8 Inspection and documentation

Every supply will be provided with a Certificate of Origin, printed only in original, containing as a minimum the following data:

— quantity of product supplied;

— description of product (see Clause 4);

— manufacturer name;

— client name and address (or job site destination).

9 Method of test

9.1 Mesh made from metallic coated wire.

Metallic coatings shall be tested in accordance with EN 10244-1 and EN 10244-2.

9.2 Mesh made from metallic extruded organic coated wire

Organic coatings shall be tested in accordance with EN 10245-1, EN 10245-2, EN 10245-3 and EN 10245-5.

9.3 Longitudinal tensile strength test procedure

9.3.1 General

The following method was developed in order to run the tests on conventional tensile machines. The objectives are to enable any standard local testing facility to carry out the test.

9.3.2 Terms and definitions

For the above-mentioned scope, the following definitions are used:

Effective sample width: distance between left and right extreme limit of the hooks placed at the top of the double twist (refer to Figure 11 to Figure 14).

Breaking load: maximum load recorded during the test (normally obtained when the first wire breaks).

Tensile strength of the mesh: ratio between the breaking load and the effective width of the sample.

Reading of the distance between superior and inferior extreme limit of the plates: measurement done at the beginning and the end of the test on both right and left side of the plates to calculate the medium elongation percentage recorded during the test.

The setting of the load equal to 4 000 N is considered as the beginning of the test (initial 0).

9.3.3 Testing method

Two connection plates, as shown in Figure 11 to Figure 14, are securely attached to a standard tensile machine.

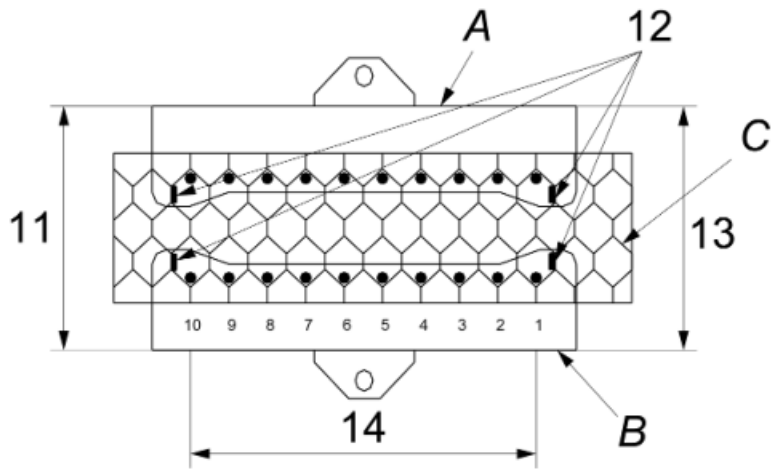

Key

1 to 10	steel hooks	14	effective width
11	left reading	*A*	upper steel plate
12	lateral hooks	*B*	underneath steel plate
13	right reading	*C*	mesh sample

Figure 11 — Connection plates to mesh type 5 x 7

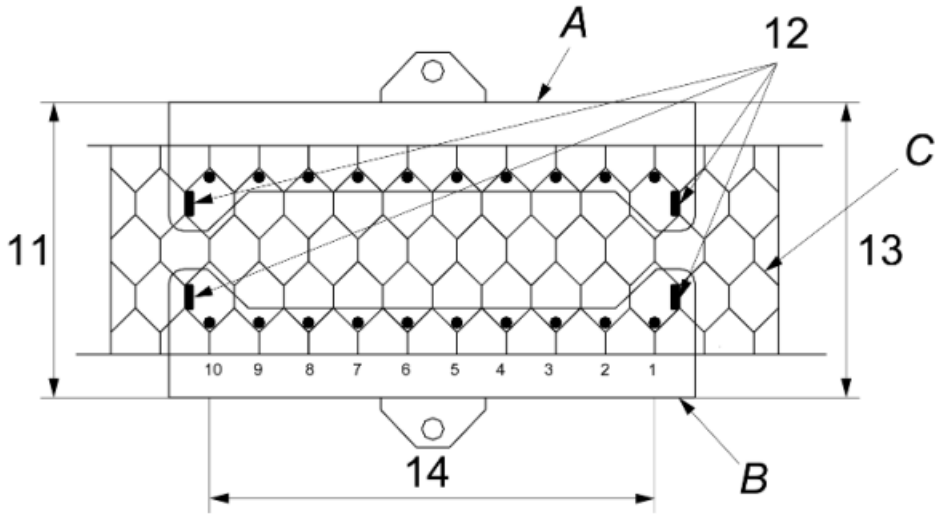

Key

1 to 10	steel hooks	14	effective width
11	left reading	*A*	upper steel plate
12	lateral hooks	*B*	underneath steel plate
13	right reading	*C*	mesh sample

Figure 12 —Connection plates to mesh type 6 x 8

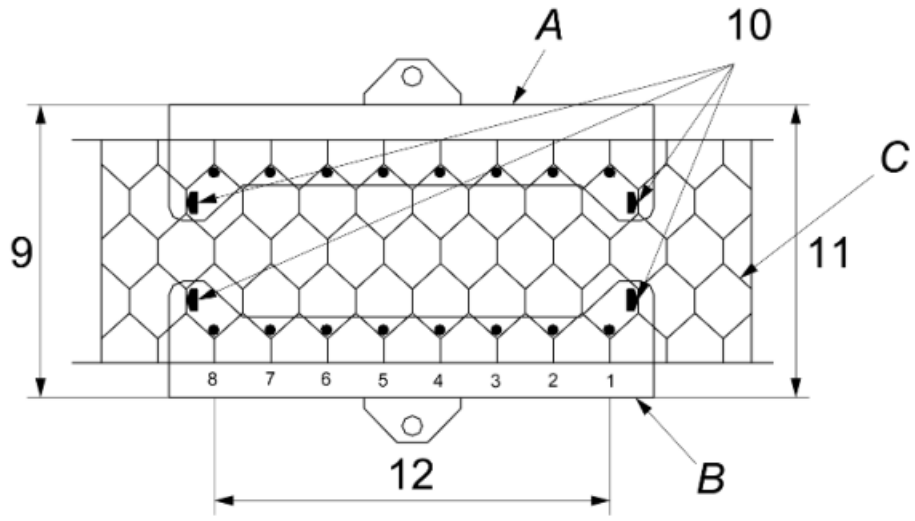

Key

1 to 8	steel hooks	12	effective width
9	left reading	*A*	upper steel plate
10	lateral hooks	*B*	underneath steel plate
11	right reading	*C*	mesh sample

Figure 13 —Connection plates to mesh type 8 x 10

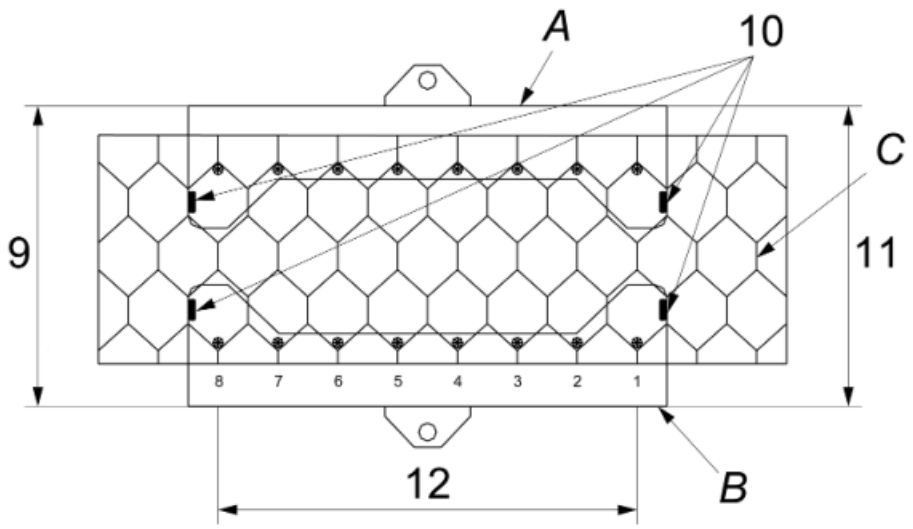

Key

1 to 8	steel hooks	12	effective width
9	left reading	*A*	upper steel plate
10	lateral hooks	*B*	underneath steel plate
11	right reading	*C*	mesh sample

Figure 14 — Connection plates to mesh type 10 x 12

For the tensile test, the sample shall be placed as shown in Figures 11, 12, 13 and 14.

The four lateral hooks on the side of the clamp (two at the bottom and two at the top) will restrain the sample laterally and facilitate elongation measurement during testing.

The strain rate during the test shall be 6 mm/min.

A preload of approximately 4 000 N will then be applied to adjust the specimen so that each wire will be properly and slightly tensioned.

The test ends when the first wire breaks.

The elongation is calculated by measuring the vertical displacements at the beginning and at the end of the test (left and right readings). The average value of the difference between initial and final displacement (normally obtained when the first wire breaks) will provide the elongation at rupture.

The test will be considered satisfactory when ruptures in a series of samples will be at different locations and not always close to the hooks. In the latter case, the test could be considered non-satisfactory.

Samples should be manually selvedged on both cross ends to the weave length, in order to guarantee a uniform and full locking effect on the double twists that will be directly solicited.

An example of a manual selvedge consists of manually inserting an additional rod by twisting and bending the wire mesh around it.

The number of samples shall be agreed between supplier and purchaser at the time of enquiry and order. The test report is required after ending the test.

10 Packaging

Hexagonal netting shall be supplied in 25 m or 50 m rolls, with a standard width up to 4,00 m.

Double twisted wire mesh products sizes shall be agreed between purchaser and manufacturer at the time of enquiry and order.

Annex A
(informative)

Description of environment of installation site, coating wire requirements

Table A.1 – Description of environment of installation site, coating wire requirements *(1 of 3)*

Site Environment level [a] (in accordance with EN ISO 9223:2012, Table 1)	Plastic coating material	Coating	Class [b] (EN 10244-2)	Assumed working life of the product (year)
Low Aggressive: (C2) Dry conditions Temperate zone, atmospheric environment with low pollution, e.g. rural areas, small towns (over 100 m above see level). Dry or cold zone, atmospheric environment with short time of wetness, e.g. deserts, sub-arctic areas	-	Zinc	A	25
	-	Zn95%/Al5% alloy	A	> 50
	-	Zn90%/Al10% alloy	A	> 120
Medium aggressive: (C3) Dry conditions Temperate zone, atmospheric environment with medium pollution or some effect of chlorides, e.g. urban areas, coastal areas with low deposition of chlorides e.g. subtropical and tropical zone, atmosphere with low pollution	-	Zinc	A	10
	-	Zn95%/Al5% alloy	A	25
	-	Zn90%/Al10% alloy	A	> 50
	Polyvinyl chloride (PVC)	Zn95%/Al5% alloy	A	> 120
	Polyamide (PA6)		E	
	Polyvinyl chloride (PVC)	Zn90%/Al10% alloy	A	> 120
	Polyamide (PA6)		E	

Table A.1 *(2 of 3)*

Site Environment level [a] (in accordance with EN ISO 9223:2012, Table 1)	Plastic coating material	Coating	Class [b] (EN 10244-2)	Assumed working life of the product (year)
High aggressive: (C4) Wet conditions Temperate zone, atmospheric environment with high pollution or substantial effect of chlorides, e.g. polluted urban areas, industrial areas, coastal areas, without spray of salt water, exposure to strong effect of de-icing salts e.g. subtropical and tropical zone, atmosphere with medium pollution industrial areas, coastal areas, shelter positions at coastline	-	Zn95%/Al5% alloy	A	10
	-	Zn90%/Al10% alloy	A	25
	Polyvinyl chloride (PVC)	Zn95%/Al5% alloy	A	120
	Polyamide (PA6)		E	
	Polyvinyl chloride (PVC)	Zn90%/Al10% alloy	A	> 120
	Polyamide (PA6)		E	
Very High aggressive: (C5) Wet conditions Temperate and subtropical zone, atmospheric environment with very high pollution and/or important effect of chlorides, e.g. industrial areas, coastal areas, shelter positions at coastline	Polyvinyl chloride (PVC)	Zn95%/Al5% alloy	A	120
	Polyamide (PA6)		E	
Subtropical and tropical zone (very high time of wetness), atmospheric environment with very high pollution SO_2 (higher than 250 µg/m^3) including accompanying and production ones and/or strong effect of chlorides, e.g. extreme industrial areas, coastal and off shore areas, occasionally contact with salt spray	Polyvinyl chloride (PVC)	Zn90%/Al10% alloy	A	> 120
	Polyamide (PA6)		E	
Extreme aggressive: (CX) Subtropical and tropical zone (very high time of wetness), atmospheric environment with very high pollution SO_2 (higher than 250 µg/m^3) including accompanying and production ones and/or strong effect of chlorides, e.g. extreme industrial areas, coastal and off shore areas, occasionally contact with salt spray.	Polyvinyl chloride (PVC)	Zn90%/Al10% alloy	A	> 120
	Polyester (P)Polyamide (PA6)		E	

Table A.1 *(3 of 3)*

As defined in Guidance Paper F (concerning the Construction Products Directive 89/106/EEC) paragraph 3.2 and Table 2 “Illustrative assumed working lives of work and construction products".

Working life (product) - the period of time during which the performance of a product will be maintained at a level that enables a properly designed and executed works to fulfil the Essential Requirements (i.e. the essential characteristics of a product meet or exceed minimum acceptable values, without incurring major costs for repair or replacement).The working life of a product depends upon its inherent durability and normal installation and maintenance.

A clear distinction has to be made between the assumed economically reasonable working life for a product (also called: *design working life*), which underlies the assessment of durability in Technical Specifications, and the actual working life of a product in a works. The latter depends on many factors beyond the control of the producer, such as design, location of use (exposure), installation, use and maintenance.

The assumed working life can thus not be interpreted as being a guarantee given by the producer.

Technical Specification writers will have to take a view about the “normal” working life of the products that they deal with. The assumed working life of a product should take account of the assumed working life of the works, the ease and cost of repair or replacement of the product, maintenance requirements and exposure conditions.

NOTE This table is not applicable for mesh used for paving reinforcements.

[a] Gabion products immersed in water (saline and/or polluted water) and/or in contact with alkaline solutions, or gabions which are subject to abrasive conditions (sand storms, …) shall be metallic coated with plastic coated or shall be made from stainless steel wire.

[b] There exist more advanced metallic coatings with a superior corrosion resistance. In terms of salt spray performance (EN ISO 9227), it means that the mesh samples shall not show more than 5 % of DBR (Dark Brown Rust) after 2 000 hours exposure on the surface. When subjected to test in sulphur dioxide environment (ISO 6988), mesh samples shall not show more than 5 % of DBR (Dark Brown Rust) after 56 cycles of discontinuous test on the surface. So assumed working life values will be improved depending upon the prevailing conditions.

Bibliography

[1] EN 10021, *General technical delivery conditions for steel products*

[2] EN 10204, *Metallic products — Types of inspection documents*

[3] EN ISO 4892-1, *Plastics — Methods of exposure to laboratory light sources — Part 1: General guidance (ISO 4892-1)*

[4] EN ISO 9001, *Quality management systems — Requirements (ISO 9001)*

This page deliberately left blank